THIS DRAWING IS REPRESENTATIVE OF THE APPARATUS PROPOSED. IF THERE IS A DISCREPANCY BETWEEN THIS PRINT AND THE WRITTEN PROPOSAL, THE SPECIFICATIONS WITHIN THE PROPOSAL PREVAIL.

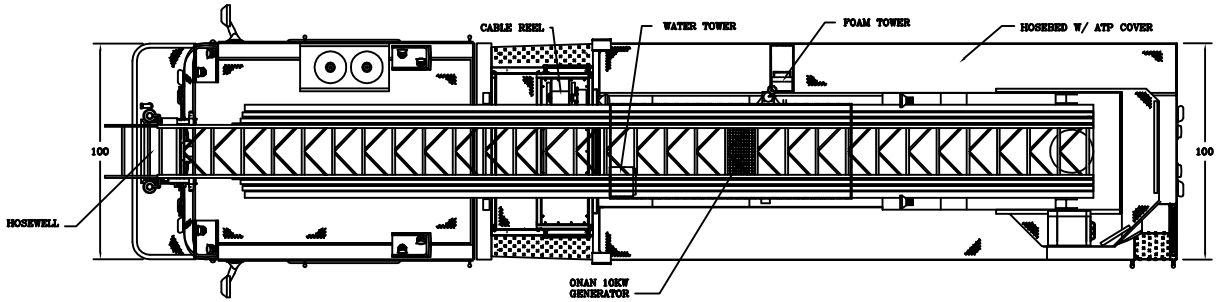

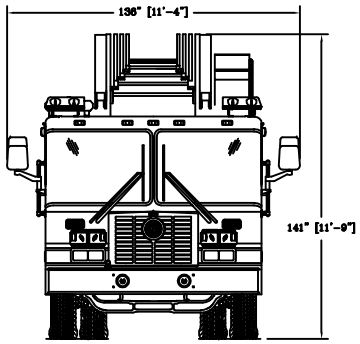

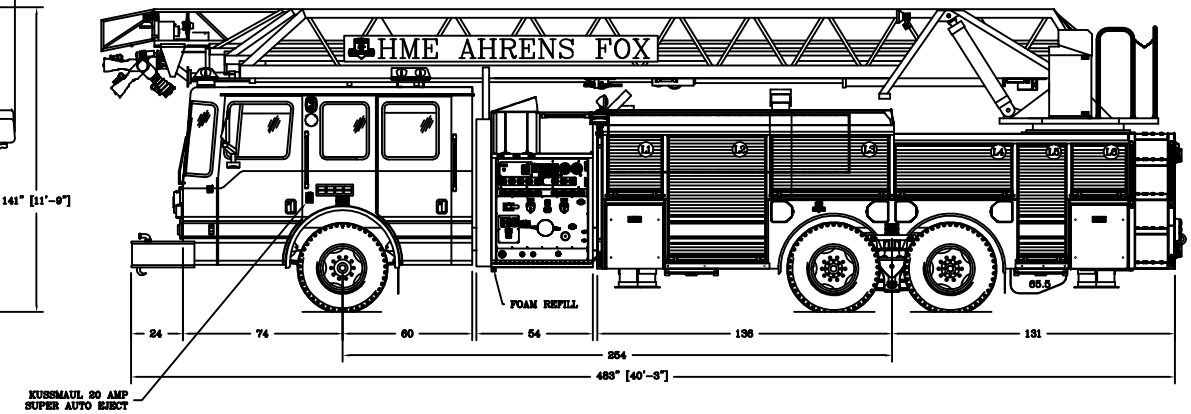

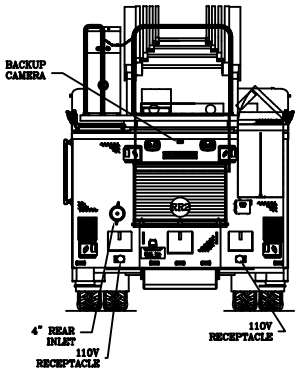

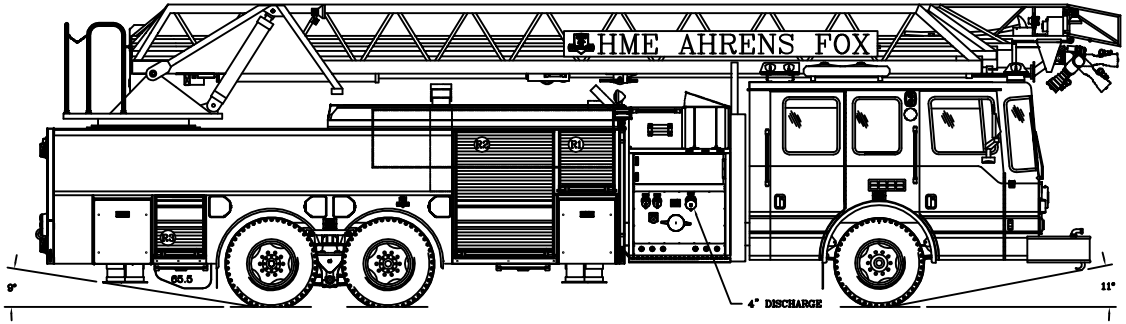

LET	BY	DATE	REVISION
I	RLJ	04 MAY '07	REVIEWED TRACKING SPEC 11–12
H	RLJ	26 APR '07	REVISED TRACKING SPEC 10/UPDATED TITLE BLOCK
G	RLJ	29 MAR '07	REVISED TRACKING SPEC 9
F	RLJ	26 MAR '07	DEPARTMENT REQUEST UPDATE
E	RLJ	22 MAR '07	REVISED TRACKING SPEC 7,8
D	RAM	21 NOV '06	REVIEWED TRACKING 6
C	RAM	25 OCT '06	CLEAN ORDER RELEASE
	RAM	25 AUG '06	REVIEWED TRACKING 2–4
B	RAM	24 AUG '06	REVISED PER TRACKING 1
A	RAM	01 AUG '06	ORIGINAL RELEASE & TRACKING SPEC

HME INCORPORATED
1950 BYRON CENTER AVE.
WYOMING, MI. 49509

THIS PRINT IS PROVIDED ON A RESTRICTED BASIS AND IS NOT TO BE USED IN ANY WAY DETRIMENTAL TO THE INTERESTS OF HME, INC.

NAME: 109' AERIAL STOCK

DRAWN	DATE	APPROVED	DRAWING FILE
R. Moleport	01 AUG '06	N/A	21002 109 Aerial Stock

THIRD ANGLE PROJECTION | SIZE: B | NUMBER: 21002 | SCALE: NTS | SHEET 1 OF 1

This drawing along with any changes made and initialed by both the "Fire Department" & HME, Inc. represents what will be constructed and supplied to the "Fire Department." Any changes to the contract specifications and drawing after today's date will be addressed via appropriate change order signed and approved by both the "Fire Department" & HME, Inc.

APPROVED BY: _____ TITLE: _____
FIRE DEPARTMENT

APPROVED BY: _____ TITLE: _____
HME, Incorporated

CREATED WITH AutoCAD®